Document number : T181127A-E

Oil mist monitor operation manual

(For Inboard space)

MEIYO ELECTRIC CO.,LTD

Created date : Nov 27th 2018

1． Foreword

This monitor is used in combination with a separately arranged oil mist transmitter. Oil mist concentration generated from inboard equipment is measured by the oil mist transmitter and conveyed to this monitor. The signal is compared with a plurality of alarm setting values provided in the monitor, and when these values are exceeded, a visible / audible alarm such as pre-alarm, high alarm is generated and furthermore, an alarm contact signal is output.

2． Handling Precautions

（1）Wiring between transmitter and monitor, wiring between monitor and external, please follow the individual delivery drawing.

（2）Please use marine wire for wiring between transmitter and monitor. MPYCS-4 (3C) or 3C shielded cable is recommended.

（3）The cable length between transmitter and monitor should be 100m or less.

3． System configuration

Refer to Fig.1.

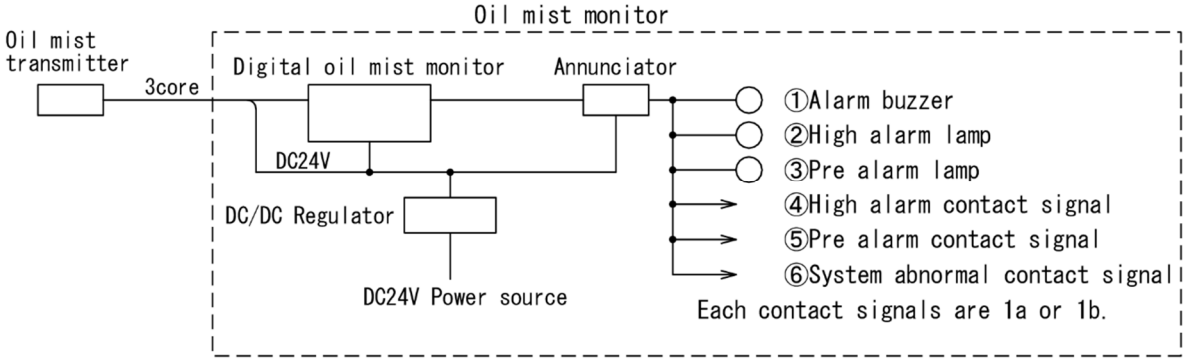

Fig.1

4． Monitor configuration

Refer to Fig.2.

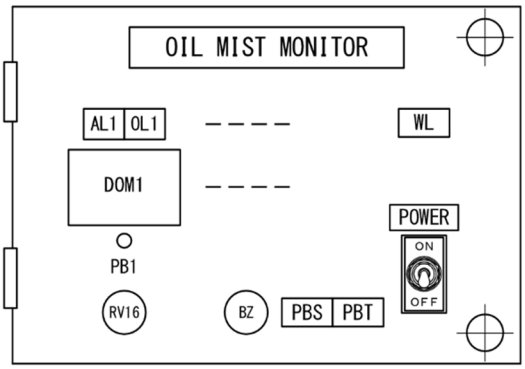

AL1～n : High alarm lamp
OL1～n : Pre alarm lamp
WL : Power lamp
DOM1～n : Digital oil mist monitoring unit
POWER : Power switch
PBT : Lamp&Buzzer test switch
PBS : Buzzer stop switch
BZ : Alarm buzzer
PB1～n : Operation test push-button switch
RV16(VR) : 4～20mA Current generator (for operation test)

Fig.2

5. Operation

5. 1 General operation

a. Power supply

When you turn on the power switch, the power lamp lights.

b. Lamp & Buzzer Test

By pressing the lamp & buzzer test pushbutton switch, lamp & buzzer test is possible.

c. Alarm lamp〔AL（Red）and OL（Orange)〕

Red lamp AL is high alarm, orange lamp OL is for pre alarm. When an error occurs, the red and orange lamp light and the buzzer sounds. Buzzer stop pressing the pushbutton switch stops the buzzer sound, and then the lamp goes out when it returns to normal.

d. Digital oil mist monitor（DOM）

Input signal (DC4～20Ma) is displayed by mist concentration value (0～2.500mg/liter). The resolution is 0.001 mg / liter.

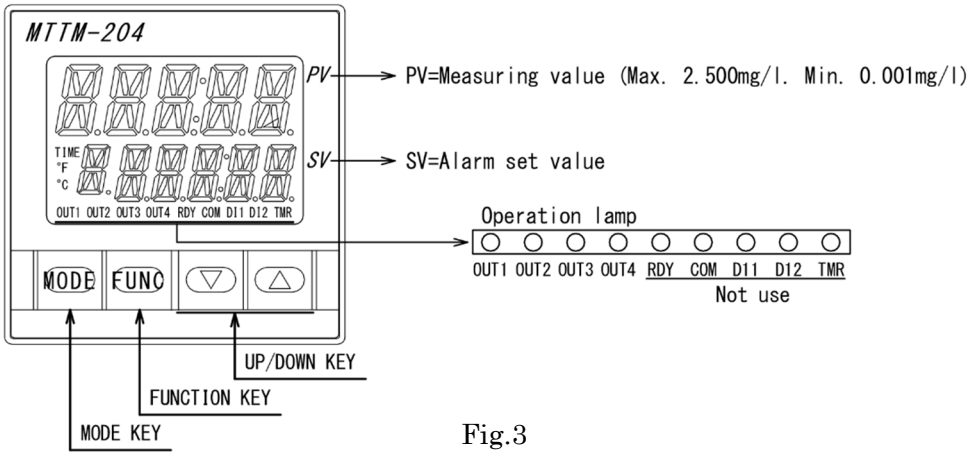

Fig.3

① Out 1 is used to output for measuring value.
② Out 2 is used to detect of sensor abnormal.
③ Out 3 is used to prealarm.
④ Out 4 is used to high alarm.
⑤ Method of alarm display(abnormal)
When occured abnormal condition to OUT 2,back light of PV changes from green to red and LED(light) of out2 lights. Out2&3 are same.
⑥ Pin assign of input and output
Refer to the Individual drawing.

5. 2 Operation test

Press one selected pushbutton switch (PB1 to PBn). After that, you can test Pre alarm and high alarm by moving DC 4 to 20 mA current generator (RV 16). At this time, please do not press two pushbutton switches at the same time.

5．3 Alarm operation

a. Operation when an alarm occurs

Refer to Fig.4.

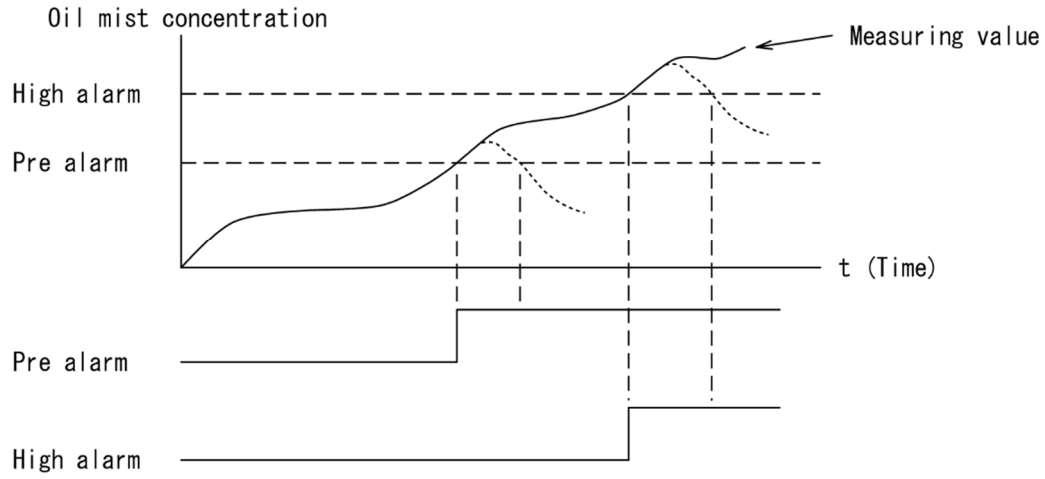

Fig.4

b. Operation after occurrence of alarm (visible / audible alarm)

Refer to Fig.5.

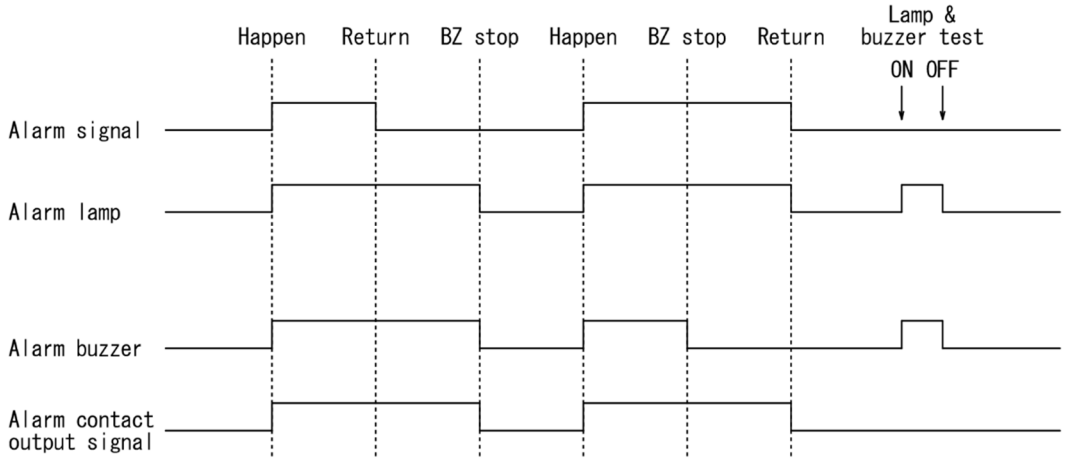

Fig.5

c. Alarm set value

The factory setting values are as shown in Table 1.

Table 1

Item	Alarm set value	Remark
Pre alarm	0.5 mg/liter	
High alarm	1.0 mg/liter	

d. Change alarm setting value

To change the alarm setting value, please follow the alarm setting method in item 10.

Please do not set the high alarm setting value beyond 2.5 mg/liter (limit value at IACS).

※Be sure to set it according to the procedure.

6 . Installation location

Avoid installing in the following places.

a. Places with excessive vibration and impact

b. Places with corrosive gases

c. Places with excessive moisture and condensation

7 . Maintenance and inspection

a. Tighten screws

Please do it once a year.

b. Cleaning the interior of the monitor

Please do it once every five years.

c. We recommend to change the monitor by about 10 years.

8 . Troubleshooting

8 . 1 Measurement is impossible.

a. Please check whether the power supply is normal.

b. Please check whether the oil mist transmitter is operating normally.

8 . 2 Measurement value is unstable

a. Please check whether the power supply voltage is normal.

b. Please check whether the oil mist transmitter is operating normally.

c. Please check that wire breakage, poor contact, and loose terminals are not present.

b. Please check whether the operation of digital oil mist monitor is normal.

8 . 3 Alarm operation is abnormal.

a. Please check whether the wiring of the annunciator unit is normal.

9 . Specification

（1） Type : MOP – D * W □

Power 1:100V 2:200V

W:Wall mounting S:Surface mounting

Measurement points

Model Name

（2） Input signal : DC4～20mA(Internal resistance 250Ω)

（3） Measurement range : 0～2.5mg/liter

（4） Measurement and alarm accuracy : ±1.0% at F.S

（5） Output signal : Pre alarm (Batch, 1a or 1b)

High alarm (Batch, 1a or 1b)

System failure (Sensor fault and Power source failure) (Batch, 1a or 1b)

DC4～20mA (Option)

（6） Operating temperature range : 5～55℃

（7） Storage temperature : -5～55℃

（8） Relative Humidity : less than 95% (No condensation)

１０．Alarm set value change method

According to the following.

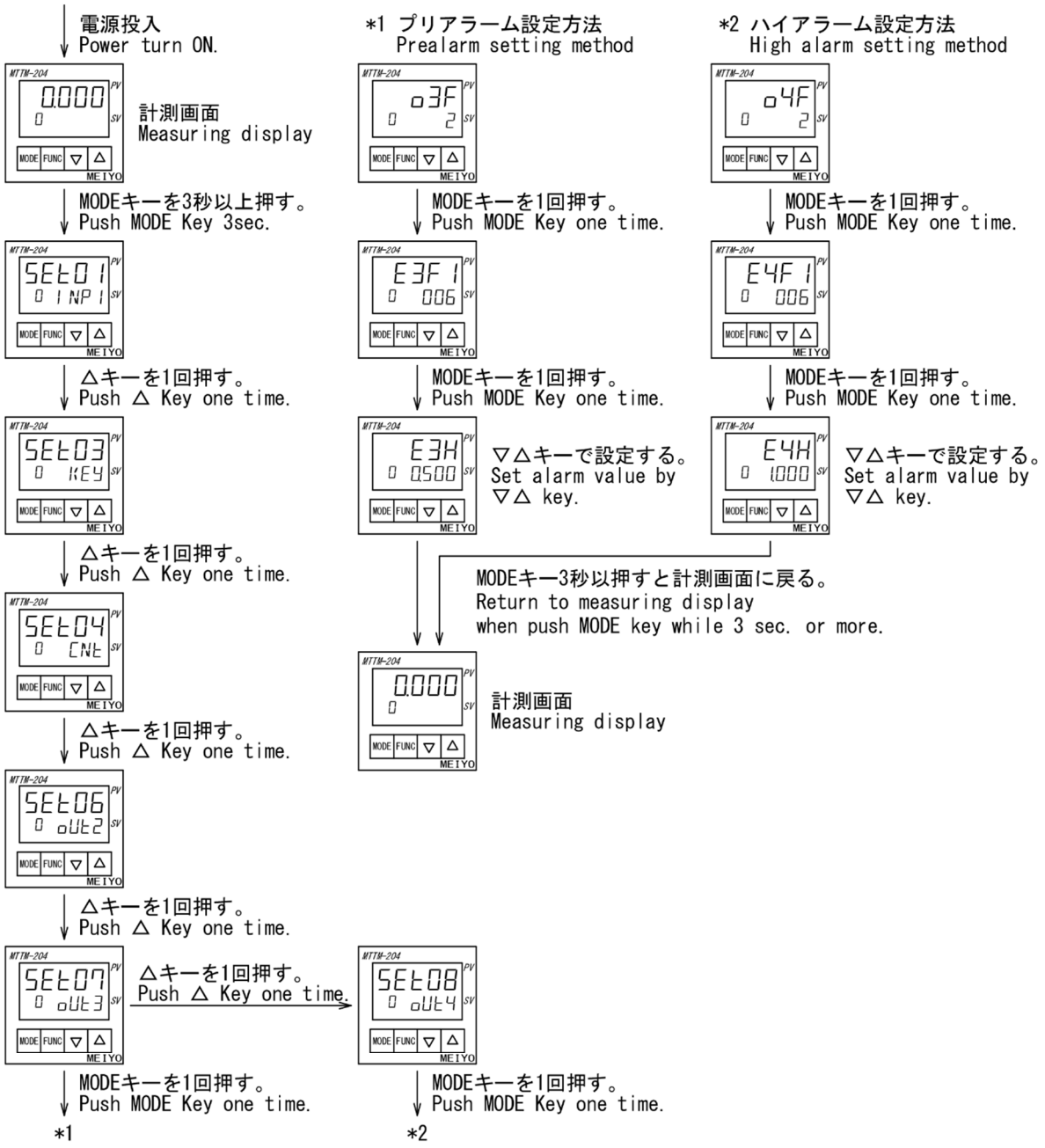

出荷時初期警報設定値は、プリアラーム設定値0.500、
ハイアラーム設定値1.000になっている。
When delivering it, set value is Prealarm 0.500,
High alarm 1.000.